Franke A600 FM EC - AVS preventative maintenance

All 40,000 cups or 12 months

$1948.00 exc. GST

Effective 1st September 2025. Price shown in AUD and are subject to change without notice.

560.0531.239 PM kit, B1

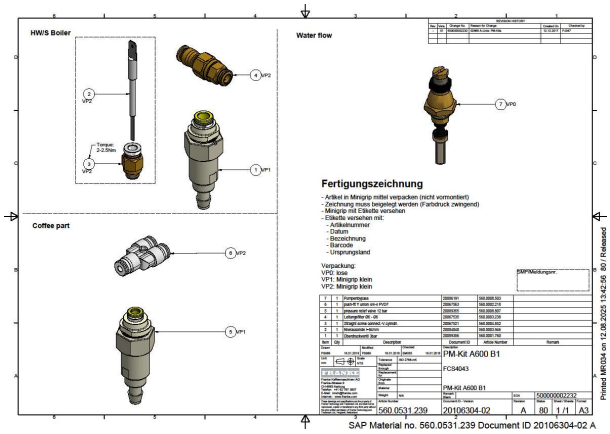

560.0720.766 PM kit, EC2 2M

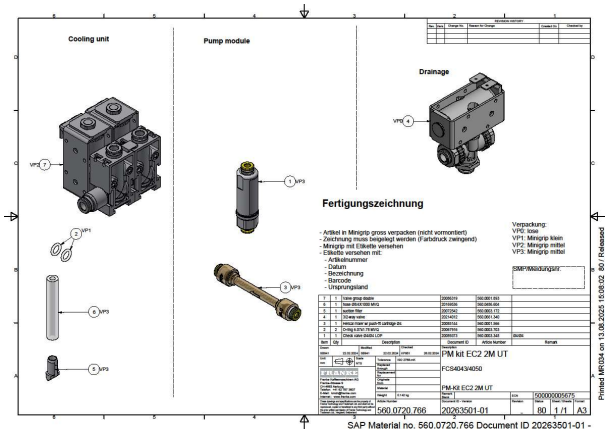

560.0599.680 PM kit, powder

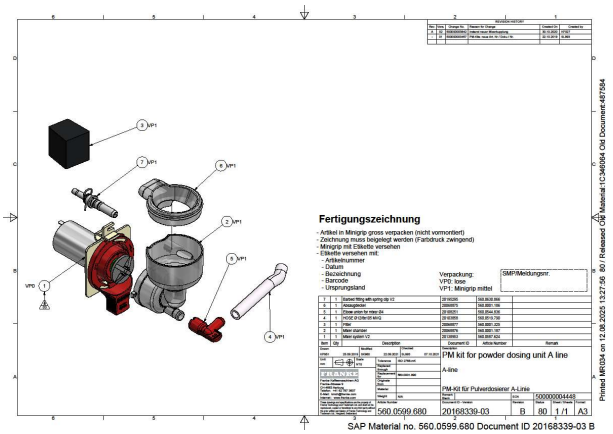

560.0599.685 PM kit, brewing unit, 50E

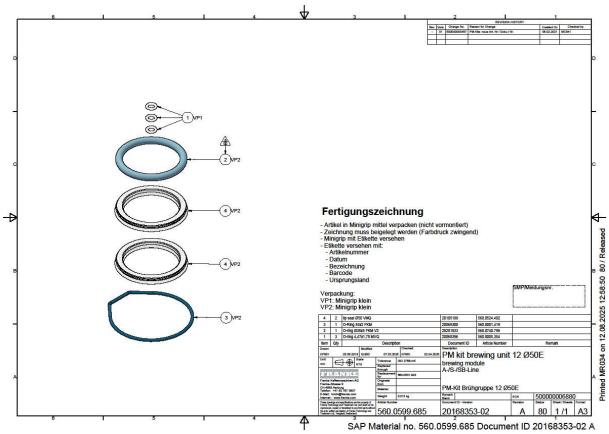

Scope of Works

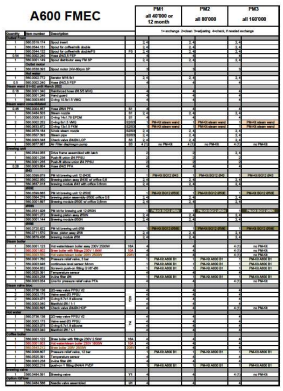

A600 FMEC

			PM1 all 40'000 or 12 month		PM2 all 80'000		PM3 all 120'000	
			1= exchange	0=clean	1=cleaning, 0=check, 1=needed exchange			
[illegible]	[illegible]	[illegible]	[illegible]	[illegible]	[illegible]	[illegible]	[illegible]	[illegible]

27.08.2025